ENCODER

EtherCAT Multiturn



Series 8.5868, 8.5888

Key-Features:

- *Solid shaft: maximum diameter 10 mm*
- *Blind hollow shaft: maximum diameter 15 mm*
- *Housing diameter 58 mm*
- *Interface: EtherCAT, CAN over Ethernet*
- *Protection class up to IP67*
- *Total resolution up to 28 Bit*
- *Maximum revolution speed 9000 turns/min*
- *Temperature range -40...+80°C*

Content:

Order Code	***....2***
Technical Data	***....3***
EtherCAT Interface	***....4***
Connection	***....4***
Technical Drawing	***....5***

18.02.26

WayCon
Positionsmesstechnik

Absolute encoders – multiturn

Standard
mechanical multiturn, optical

Sendix 5868 / 5888 (shaft / hollow shaft)

EtherCAT



The multiturn encoders Sendix 5868 and 5888 with second-generation EtherCAT interface and optical sensor technology are ideal for use in all applications with an EtherCAT interface.

The data communication is based on CAN over EtherNet and ideally suited for use in real time applications.

These encoders are available with a solid shaft up to a maximum of 10 mm or a blind hollow shaft up to 15 mm.

Ex 2/22 · cULus · RoHS · EtherCAT Conformance tested



Mechanical drive · Safety-Lock™ · High rotational speed · Temperature range · High protection level · High shaft load capacity · Shock / vibration resistant · Magnetic field proof · Reverse polarity protection · Optical sensor · Surface protection salt spray-tested optional

Reliable

- EtherCAT conformance tested.
- Integration of the latest slave – EtherCAT stack from Beckhoff, Version 5.01.
- Ideally suited for use in harsh outdoor environments, thanks to IP67 protection and rugged housing construction.

Flexible

- Use of CoE (CAN over EtherNet).
- Genuine new position information as a result of minimal cycle time of 62.5 µs in the DC mode.
- Faster, easier error-free connection thanks to M12 connectors.
- Supports Hot Connect.

Order code Shaft version

8.5868	.	X	X	B	2	.	B2	12
Type		a	b	c	d		e	

10 by 10

a *Flange*
1 = clamping flange, IP65 ø 58 mm [2.28"]
3 = clamping flange, IP67 ø 58 mm [2.28"]
2 = synchro flange, IP65 ø 58 mm [2.28"]
4 = synchro flange, IP67 ø 58 mm [2.28"]
5 = square flange, IP65 □63.5 mm [2.5"]
7 = square flange, IP67 □63.5 mm [2.5"]

b *Shaft (ø x L), with flat*
1 = 6 x 10 mm [0.24 x 0.39"] 1)
2 = 10 x 20 mm [0.39 x 0.79"] 2)
3 = 1/4" x 7/8"
4 = 3/8" x 7/8"

c *Interface / power supply*
B = EtherCAT / 10 ... 30 V DC

d *Type of connection*
removable bus terminal cover
2 = 3 x M12 connector, 4-pin

e *Fieldbus profile*
B2= EtherCAT with CoE (CAN over EtherNet)

Optional on request
- Ex 2/22
- surface protection salt spray tested

Order code Hollow shaft

8.5888	.	X	X	B	2	.	B2	12
Type		a	b	c	d		e	

10 by 10

a *Flange*
1 = with spring element, long, IP65
2 = with spring element, long, IP67
3 = with stator coupling, IP65 ø 65 mm [2.56"]
4 = with stator coupling, IP67 ø 65 mm [2.56"]
5 = with stator coupling, IP65 ø 63 mm [2.48"]
6 = with stator coupling, IP67 ø 63 mm [2.48"]

b *Blind hollow shaft (insertion depth max. 30 mm [1.18"])*
3 = ø 10 mm [0.39"]
4 = ø 12 mm [0.47"]
5 = ø 14 mm [0.55"]
6 = ø 15 mm [0.59"]
8 = ø 3/8"
9 = ø 1/2"

c *Interface / power supply*
B = EtherCAT / 10 ... 30 V DC

d *Type of connection*
removable bus terminal cover
2 = 3 x M12 connector, 4-pin

e *Fieldbus profile*
B2= EtherCAT with CoE (CAN over EtherNet)

Optional on request
- Ex 2/22
- surface protection salt spray tested

1) Preferred type only in conjunction with flange type 2.
2) Preferred type only in conjunction with flange type 1.

Absolute encoders – multiturn

Standard mechanical multiturn, optical	Sendix 5868 / 5888 (shaft / hollow shaft)	EtherCAT

Mounting accessory for hollow shaft encoders	Dimensions in mm [inch]	Order no.
Cylindrical pin, long for flange with spring element (flange type 1 + 2)	with fixing thread 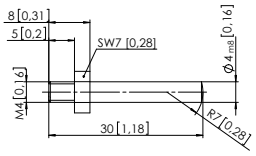	**8.0010.4700.0000**

Connection technology	Order no.
Cordset, pre-assembled	
M12 male connector with external thread for port IN and port OUT, 4-pin 2 m [6.56']	**K4P2M-S-M12-CAT**
M12 female connector with coupling nut for power supply, 4-pin 2 m [6.56']	**K4P2M-S-M12**

Technical data

Mechanical characteristics

Maximum speed	IP65 up to 70°C [158°F]	9000 min^{-1}, 7000 min^{-1} (continuous)
	IP65 up to T_{max}	7000 min^{-1}, 4000 min^{-1} (continuous)
	IP67 up to 70°C [158°F]	8000 min^{-1}, 6000 min^{-1} (continuous)
	IP67 up to T_{max}	6000 min^{-1}, 3000 min^{-1} (continuous)
Starting torque - at 20°C [68°F]	IP65	< 0.01 Nm
	IP67	< 0.05 Nm
Mass moment of inertia		
	shaft version	3.0 x 10^{-6} kgm^2
	hollow shaft version	7.5 x 10^{-6} kgm^2
Load capacity of shaft	radial	80 N
	axial	40 N
Weight		approx. 0.54 kg [19.05 oz]
Protection acc. to EN 60529		
	housing side	IP67
	shaft side	IP65, opt. IP67
Working temperature range		-40°C ... +80°C [-40°F ... +176°F]
Material	shaft/hollow shaft	stainless steel
	flange	aluminum
	housing	zinc die-cast
Shock resistance acc. to EN 60068-2-27		2500 m/s^2, 6 ms
Vibration resistance acc. to EN 60068-2-6		100 m/s^2, 55 ... 2000 Hz

Electrical characteristics

Power supply	10 ... 30 V DC
Power consumption (no load)	max. 120 mA
Reverse polarity protection of the power supply	yes
UL approval	file 224618
CE compliant acc. to	EMC guideline 2014/30/EU RoHS guideline 2011/65/EU

Interface characteristics EtherCAT

Resolution singleturn	1 ... 65535 (16 bit), scalable default: 8192 (13 bit)
Number of revolutions (multiturn)	max. 4096 (12 bit) scalable only via the total resolution
Total resolution	1 ... 268.435.456 (28 bit), scalable default: 33.554.432 (25 bit)
Code	binary
Protocol	EtherNet / EtherCAT

Diagnostic LED (red)

LED is ON with the following fault conditions:

Sensor error (internal code or LED error), low voltage, over-temperature

Run LED (green)

LED is ON with the following conditions:

Preop-, Safeop and Op-State (EtherCAT status machine)

2 x Link LEDs (yellow)

LED is ON with the following conditions (port IN and port OUT):

Link detected

Modes

Freerun, distributed clock

Absolute encoders – multiturn

Standard
mechanical multiturn, optical | **Sendix 5868 / 5888 (shaft / hollow shaft)** | **EtherCAT**

General information about CoE (CAN over EtherNet)

The EtherCAT encoders support the CANopen communication profile according to DS301. In addition device-specific profiles like the encoder profile DS406 are available.

Scaling, preset values, limit switch values and many other parameters can be programmed via the EtherCAT bus.

When switching the device on, all parameters are loaded from an EEPROM, where they were saved previously to protect them against power-failure.

The following output values may be combined as PDO (PDO mapping): **position, speed, temperature values** and **working area state** as well as other process values.

CANopen encoder profile 3.2.10 CoE (CAN over EtherNet)

The following parameters are programmable:

- Position update time of 62.5 µs.
- EtherCAT certificate of conformity.
- Speed with sign.
- Four units for speed calculation: steps/sec, steps/100 ms, steps/10 ms, min^{-1}.
- Time stamp as system time at the point in time when the position is read out.
- Two working area state registers.
- Along with the scaled position, the raw data – position as process value – is also mappable.
- Dynamic mapping.
- Gating time: setting of the time interval, via which the speed value can be interpolated.
- Sensor temperature in degrees Celsius.
- Comprehensive plausibility test when downloading parameters to the encoder.
- Alarm and warning messages.
- User interface with visual display of bus and fault status – 4 LEDs.
- Extended error management for position sensing with integrated temperature control.
- Implementation of the latest CANopen profile 3.2.10 from the 18th February 2011.
- Hot-Connect – Support for rapid change of Bus-topology.

Terminal assignment bus

Interface	Type of connection	Function	M12 connector, 4-pin					
B	2 (3 x M12 connector)	Bus Port IN	Signal:	Transmit data+	Receive data+	Transmit data -	Receive data -	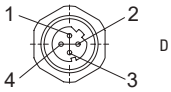 D coded
			Abbreviation:	TxD+	RxD+	TxD-	RxD-	
			Pin:	1	2	3	4	
		Power supply	Signal:	Voltage +	–	Vo age –	–	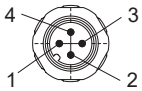
			Abbreviation:	+ V	–	0 V	–	
			Pin:	1	2	3	4	
		Bus Port OUT	Signal:	Transmit data+	Receive data+	Transmit data -	Receive data -	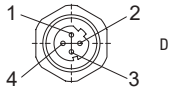 D coded
			Abbreviation:	TxD+	RxD+	TxD-	RxD-	
			Pin:	1	2	3	4	

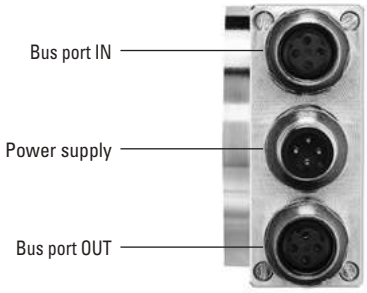

Absolute encoders – multiturn

Standard
mechanical multiturn, optical | **Sendix 5868 / 5888 (shaft / hollow shaft)** | **EtherCAT**

Dimensions shaft version, with removable bus terminal cover

Dimensions in mm [inch]

Clamping flange, ø 58 [2.28]
Flange type 1 and 3

1 3 x M3, 6.0 [0.24] deep
2 3 x M4, 8.0 [0.31] deep

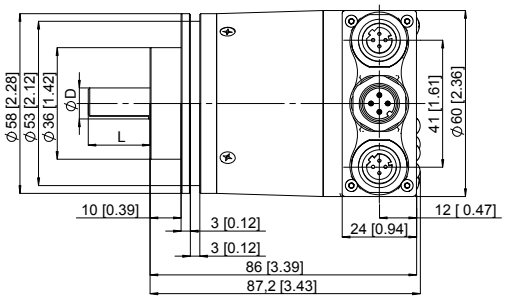

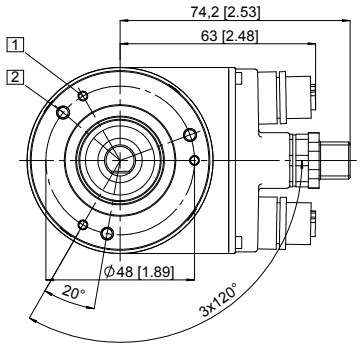

D	Fit	L
6 [0.24]	h7	10 [0.39]
10 [0.39]	f7	20 [0.79]
1/4"	h7	7/8"
3/8"	h7	7/8"

Synchro flange, ø 58 [2.28]
Flange type 2 and 4

1 3 x M4, 6.0 [0.24] deep

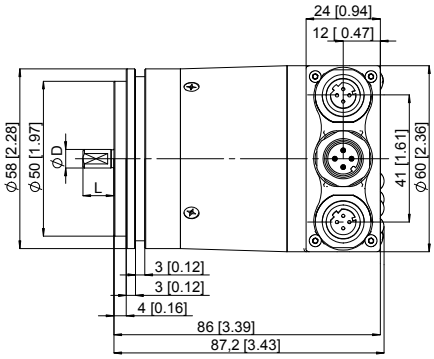

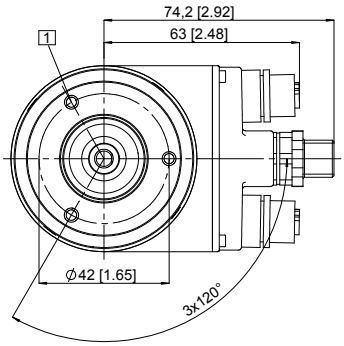

D	Fit	L
6 [0.24]	h7	10 [0.39]
10 [0.39]	f7	20 [0.79]
1/4"	h7	7/8"
3/8"	h7	7/8"

Square flange, □ 63.5 [2.5]
Flange type 5 and 7

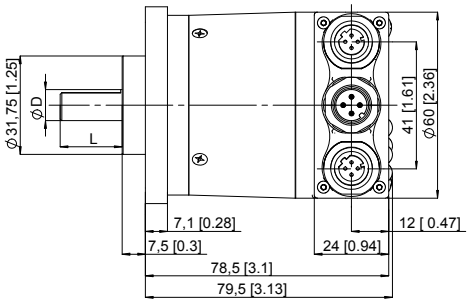

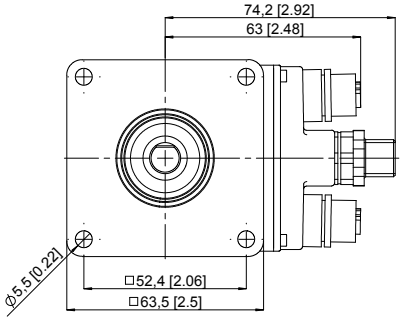

D	Fit	L
6 [0.24]	h7	10 [0.39]
10 [0.39]	f7	20 [0.79]
1/4"	h7	7/8"
3/8"	h7	7/8"

Absolute encoders – multiturn

Standard
mechanical multiturn, optical | **Sendix 5868 / 5888 (shaft / hollow shaft)** | **EtherCAT**

Dimensions hollow shaft version (blind hollow shaft), with removable bus terminal cover

Dimensions in mm [inch]

Flange with spring element, long
Flange type 1 and 2

1 Slot spring element recommendation: cylindrical pin DIN 7, ø 4 [0.16]

2 3 x M3, 5.5 [0.22] deep

3 Recommended torque for the clamping ring 0.6 Nm

D	Fit	L
10 [0.39]	H7	30 [1.18]
12 [0.47]	H7	30 [1.18]
14 [0.55]	H7	30 [1.18]
15 [0.59]	H7	30 [1.18]
3/8"	H7	30 [1.18]
1/2"	H7	30 [1.18]
L = insertion depth max. blind hollow shaft		

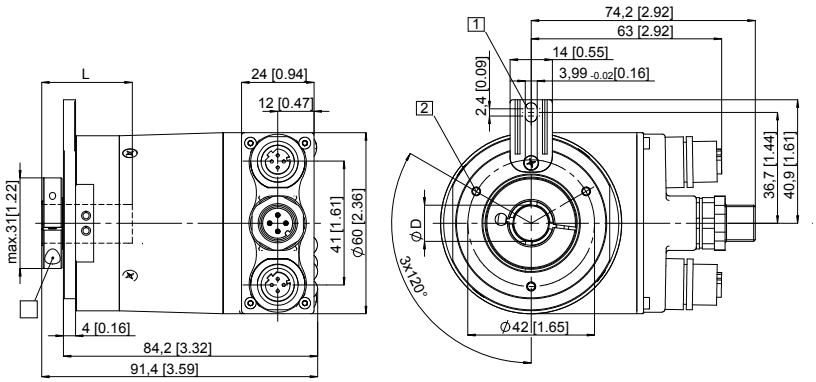

Flange with stator coupling, ø 63 [2.48]
Flange type 5 and 6

1 Recommended torque for the clamping ring 0.6 Nm

D	Fit	L
10 [0.39]	H7	30 [1.18]
12 [0.47]	H7	30 [1.18]
14 [0.55]	H7	30 [1.18]
15 [0.59]	H7	30 [1.18]
3/8"	H7	30 [1.18]
1/2"	H7	30 [1.18]
L = insertion depth max. blind hollow shaft		

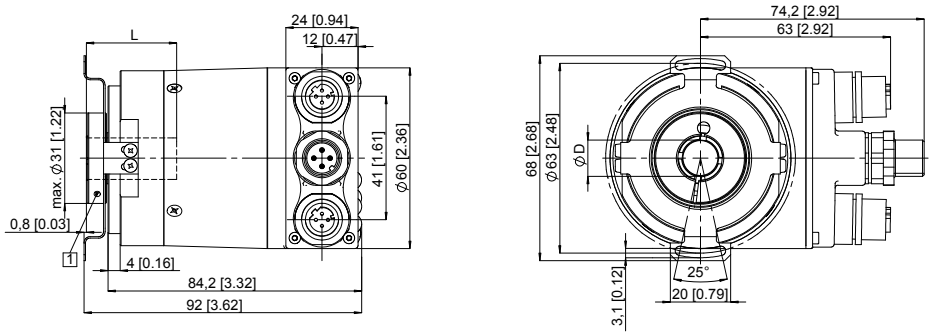

Flange with stator coupling, ø 65 [2.56]
Flange type 3 and 4

1 Recommended torque for the clamping ring 0.6 Nm

D	Fit	L
10 [0.39]	H7	30 [1.18]
12 [0.47]	H7	30 [1.18]
14 [0.55]	H7	30 [1.18]
15 [0.59]	H7	30 [1.18]
3/8"	H7	30 [1.18]
1/2"	H7	30 [1.18]
L = insertion depth max. blind hollow shaft		

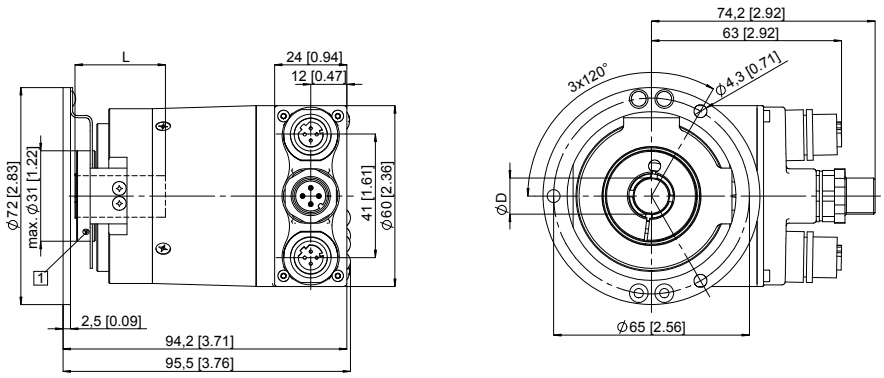

Subject to change without prior notice.

WayCon Positionsmesstechnik GmbH
email: info@waycon.de
internet: www.waycon.biz

Headquarters Munich
Siemensstr. 5
85521 Ottobrunn
Tel. +49 (0)89 67 97 13-0

Office Cologne
Auf der Pehle 1
50321 Brühl
Tel. +49 (0)89 67 97 13-100