COMPACT DIGITAL PRESSURE SWITCH

TECHNICAL CHARACTERISTICS:

- ☑ 304 stainless steel shell, IP65 structural design
- ☑ Double-stage rotation structure, quickly adjust the screen orientation
- ☑ OLED screen design, wide viewing angle range and high resolution
- ☑ Multiple output modes optional: 4~20mA, PNP/NPN switchable
- ☑ Dual-channel alarm lights, multi-function button design

PGG is a digital pressure switch with an OLED screen suitable for hydraulic environments. The product is designed with a 304 stainless steel case and a plastic case head. The protection capability can reach IP65 level. The product can be used in harsh environments.

This pressure switch adopts a universal threaded joint design. It is designed for high load conditions in hydraulic environments and is equipped with an ED sealing method to achieve good long-term stability. This product is equipped with a double-section rotating structure that can adjust the screen orientation to ensure that customers can obtain good viewing angles in different installation positions.

This pressure switch is equipped with multiple function buttons. Users can quickly set hysteresis value, upper and lower limit settings, hysteresis mode/window mode and other functions. Equipped with a standard 5-core M12 aviation plug line (1 meter), users can directly replace the old mechanical pressure switch.

APPLICATIONS:

◇Machine tool drive monitoring
◇Automated production line
◇High speed train
◇Hydraulic equipment
◇Other occasions to replace mechanical pressure switches
◇Automatic control equipment

TECHNICAL PARAMETERS:

Measuring Range	0~0.1..1.0..60MPa
Accuracy Level	± 0.5%FS
Overload Pressure	≤10MPa 200%;>10MPa 150%
Destroying Pressure	≤10MPa 300%;>10MPa200%
Screen Display Mode	OLED
Screen Resolution	128*64
Supply Voltage	12~28V DC
Output Signal	Output 1: NPN or PNP (switchable) Output 2: NPN or PNP (switchable) Other outputs: 4~20mA
Load Current	≤100mA
Operating Temperature	(-20~65)℃
Electrical Connections	M12 plug
Electrical Protection	Anti-reverse connection protection, anti-electromagnetic interference
Threaded Port	M20x1.5, G1/4, NPT1/4 or customized thread
Interface Material	304 stainless steel
Diaphragm Material	316L stainless steel
Protection Level	IP65
Accessories	M12 standard 5-core 12-pin cable (1 meter)

DIGITAL PRESSURE SWITCH

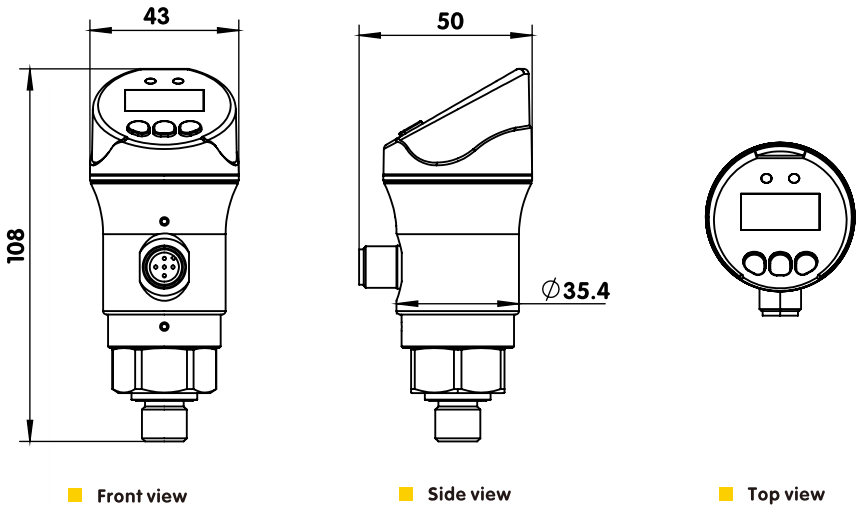

Front view Side view Top view

BLZ PGG (0~1)MPa 2DO A 1 M20 P3

SELECTION GUIDE:

BLZ PGG (0...1)MPa 2DO A 1 M20 P3

Model:
BLZ PGG
Compact digital pressure switch

Range:
(X–X) MPa (X–X) BAR
(X–X) PSI (X–X) kPa
(X–X)Kgf/cm²

Switch output:
2DO (Two sets of switch outputs)

Other output:
A (4–20mA)

Supply Voltage:
P3 (12~28V DC)

Screw thread:
M20(M20*1.5) N12(NPT1/2)
G12(G1/2) G14(G1/4)
KF25(KF25 Clamp)
M9(Customized)

Accuracy:
1 (± 0.5%FS)